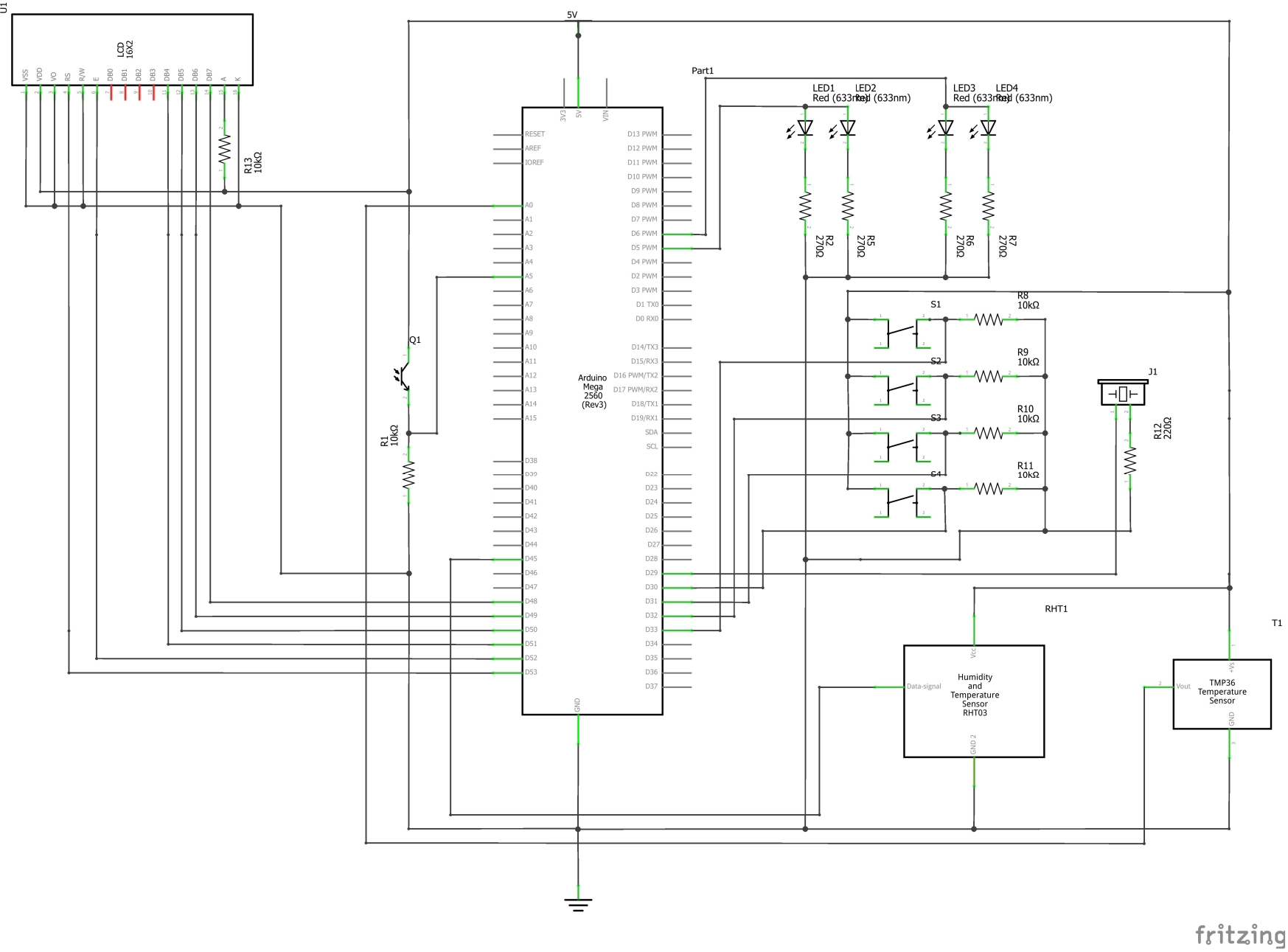
U1
LCD
16X2
VSS
VDD
VO
RS
R/W
E
DB0
DB1
DB2
DB3
DB4
DB5
DB6
DB7
A
K
R13
10kΩ
5V
Part1
LED1
Red (633nm)
LED2
Red (633nm)
LED3
Red (633nm)
LED4
Red (633nm)
R2
270Ω
R5
270Ω
R6
270Ω
R7
270Ω
Arduino
Mega
2560
(Rev3)
RESET
AREF
IOREF
3V3
5V
VIN
GND
Q1
R1
10kΩ
S1
S2
S3
S4
R8
10kΩ
R9
10kΩ
R10
10kΩ
R11
10kΩ
J1
R12
220Ω
RHT1
Vcc
Data-signal
GND 2
Humidity
and
Temperature
Sensor
RHT03
T1
+Vs
Vout
GND
TMP36
Temperature
Sensor
fritzing